2. Дупак Н. В. Педагогічні засоби формування культури праці учнів у навчально-трудовій діяльності / Н. В. Дупак // Нова педагогічна думка. − 1999. − № 1. – С.42–45.
3. Макаренко А. С. Твори в 7-ми т. / А. С. Макаренко. – Т. 4. – Книга для батьків. Лекції про виховання дітей. − Виступи з питань сімейного виховання. – К. : Рад. школа, 1954. – 524 с.
4. Національна доктрина розвитку освіти // Освіта України. – 2002. – № 33.
5. Сухомлинський В. О. Вибрані твори. В 5-ти т. / В. О. Сухомлинський. – Т. 1. – К. : Радянська школа, 1976. – 654 с.

Vitaliy Fedorov
Науковий керівник: к. п. н., доц. Борзенко О. П.

TECHNOLOGY OF PETROLEUM REFINING

The article deals with the petroleum refining. Petroleum refining processes are the chemical engineering processes and other facilities used in petroleum refineries (also referred to as oil refineries) to transform crude oil into useful products such as liquefied petroleum gas (LPG), gasoline or petrol, kerosene, jet fuel, diesel oil and fuel oils.

The refining of crude petroleum owes its origin to the successful drilling of the first oil well in Titusville, Pennsylvania, U.S., in 1859. Prior to that time, petroleum was available only in very small quantities from natural seepage of subsurface oil in various areas throughout the world. However, such limited availability restricted the uses for petroleum to medicinal and specialty purposes. With the discovery of «rock oil» in northwestern Pennsylvania, crude oil became available in sufficient quantity to inspire the development of larger-scale processing systems. The earliest refineries employed simple distillation units, or «stills,» in separation of various constituents of petroleum by heating the crude oil mixture in a vessel and condensing the resultant vapours into liquid fractions. Initially the primary product was kerosene, which proved to be more abundant, cleaner-burning lamp oil of more consistent quality than whale oil or animal fat.

The lowest-boiling raw product from the still was «straight run» naphtha, a forerunner of unfinished gasoline (petrol). Its initial commercial application was primarily as a solvent. Higher-boiling materials were found to be effective as lubricants and fuel oils, but they were largely novelties at first.

The development of the internal-combustion engine in the later years of the 19th century created a small market for crude naphtha. But the development of the automobile at the turn of the century sharply increased the demand for quality gasoline, and this finally provided a home for the petroleum fractions that were too volatile to be included in kerosene. As demand for automotive fuel rose, methods for continuous distillation of crude oil were developed [3].

Crude oil is a multicomponent mixture consisting of more than 108 compounds. Petroleum refining refers to the separation as well as reactive processes to yield various valuable products. Therefore, a key issue in the

petroleum refining is to deal with multicomponent feed streams and multicomponent product streams. Usually, in chemical plants, people encounter streams not possessing more than 10 components, which is not the case in petroleum refining. Therefore, characterization of both crude, intermediate product and final product streams is very important to understand the processing operations effectively [2].

Primary crude oil cuts in a typical refinery include gases, light/heavy naphtha, kerosene, light gas oil, heavy gas oil and residue. From these intermediate refinery product streams several final product streams such as fuel gas, liquefied petroleum gas (LPG), gasoline, jet fuel, kerosene, auto diesel, lubricants, bunker oil, asphalt and coke are obtained. The entire refinery technology involves careful manipulation of various feed properties using both chemical and physical changes [1].

Conceptually, a process of refinery can be viewed upon as a combination of both physical and chemical processes or unit operations and unit processes respectively. Typically, the dominant physical process in a refinery is the distillation process that enables the removal of lighter components from the heavier components. Other chemical processes such as alkylation and isomerisation are equally important in the refinery engineering as these processes enable the reactive transformation of various functional groups to desired functional groups in the product streams [2].

Petroleum refineries are very large industrial complexes that involve many different processing units and auxiliary facilities such as utility units and storage tanks. Each refinery has its own unique arrangement and combination of refining processes largely determined by the refinery location, desired products and economic considerations [1].

The crude oil distillation unit (CDU) is the first processing unit in virtually all petroleum refineries. The CDU distills the incoming crude oil into various fractions of different boiling ranges, each of which is then processed further in the other refinery processing units. The CDU is often referred to as the atmospheric distillation unit because it operates at slightly above atmospheric pressure.

Below is a schematic flow diagram of a typical crude oil distillation unit (Fig.1.). The incoming crude oil is preheated by exchanging heat with some of the hot, distilled fractions and other streams. It is then desalted to remove inorganic salts (primarily sodium chloride).

Following the desalted, the crude oil is further heated by exchanging heat with some of the hot, distilled fractions and other streams. It is then heated in a fuel-fired furnace (fired heater) to a temperature of about 398°C and routed into the bottom of the distillation unit.

The cooling and condensing of the distillation tower overhead is provided partially by exchanging heat with the incoming crude oil and partially by either an air-cooled or water-cooled condenser. Additional heat is removed from the distillation column by a pump around system as shown in the diagram below (Fig.1.).

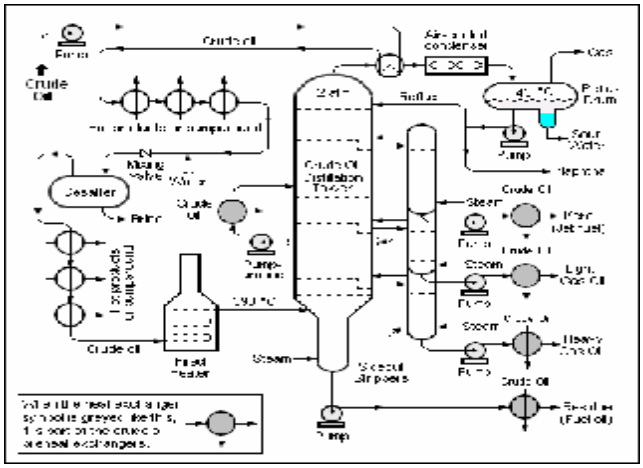

Fig.1. Diagram of a typical crude oil distillation unit

As shown in the flow diagram, the overhead distillate fraction from the distillation column is naphtha. The fractions removed from the side of the distillation column at various points between the column top and bottom, are called side cuts. Each of the side cuts (i.e., the kerosene, light gas oil and heavy gas oil) is cooled by exchanging heat with the incoming crude oil. All of the fractions (i.e., the overhead naphtha, the side cuts and the bottom residue) are sent to intermediate storage tanks before being processed further [4].

The image below is a schematic flow diagram of a typical petroleum refinery that depicts the various refining processes and the flow of intermediate product streams that occurs between the inlet crude oil feedstock and the final end-products (Fig.2.).

The diagram depicts only one of the literally hundreds of different oil refinery configurations. The diagram also does not include any of the usual refinery facilities providing utilities such as steam, cooling water, and electric power as well as storage tanks for crude oil feedstock and for intermediate products and end products.

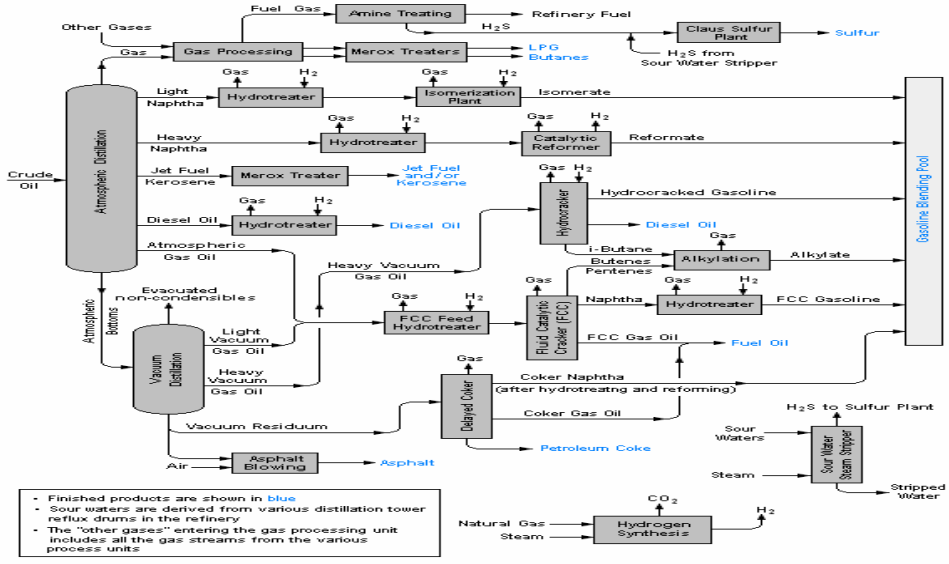

Fig.2. Diagram of oil refinery configurations.

References:

1. Electronic resource. – Access mode: https://en.wikipedia.org/wiki/ Petroleum_refining_processes
2. Electronic resource. – Access mode: http://nptel.ac.in/courses/103103029
3. Electronic resource. – Access mode: https://www.britannica.com/ technology/petroleum-refining

Ирина Феклистова
Научный руководитель: ст. препод. Калилец Л. М.

СУЩНОСТЬ ЯЗЫКА. БЕЛОРУССКИЙ ЯЗЫК В КОНТЕКСТЕ СОВРЕМЕННОГО ВРЕМЕНИ

Язык – уникальнейшее явление. Он одновременно явление идеальное и материальное, индивидуальное и социальное, самое древнее и самое свежее. Оно отличает человека от всего мира живых существ и объединяет большой класс живых существ в один человеческий род. При помощи языка человек имеет доступ ко всем человеческим знаниям. Люди удовлетворяют свои потребности, заставляя других делать что-нибудь за них. Мы можем говорить одно, а думать другое; можем похвалить иобидеть, «лечить и калечить» словом.

Народ и язык, один без другого, представлен быть не может. Оба вместе обуславливают иногда нераздельность свою в мысли одним названием: так и мы, славяне, соединили в одном слове «язык» понятие о говоре народном с понятием о своем народе. Таким образом, язык есть собственность нераздельная целого народа. Переходя от человека к человеку, от поколения к поколению, из века в век, он хранится народом как его драгоценное сокровище, которое по прихотям частных желаний не может сделаться ни богаче, ни беднее, – ни умножиться, ни растратиться. Частная воля может не захотеть пользоваться им, отречься от его хранения, отречься с этим вместе от своего народа; но за тем не последует уменьшение ценности богатств, ей не принадлежащих. Все, что в нем есть, и все, что в нем происходит, и сущность его и изменяемость – все законно, как и во всяком произведении природы. В каждом языке прослеживается жизненный и духовный опыт народа – создателем и носителем языка. Некоторые ученые даже считают, что каждый народ видит мир через призму своего родного языка, так как, являясь своеобразным кодом культуры, язык в определенной степени определяет мировоззрение и менталитет народа. Известный немецкий ученый В. Гумбольдт утверждал, что «в каждом языке заложено самобытное мировоззрение. Как отдельный звук стоит между предметом и человеком, так и весь язык в целом выступает между человеком и природой». Действительно, условия жизни народа (ландшафт, климат, растения и животный мир), предопределяя